DGA LINE

3-jaw chuck for fast clamping made on aluminum

Fast clamping made of aluminum, Altefiert®

CHUCK WITH BASIC AND TOP JAWS FOR USE IN MEASURING TECHNOLOGY

Technical data and order overview Type DGA (3-jaw chuck)

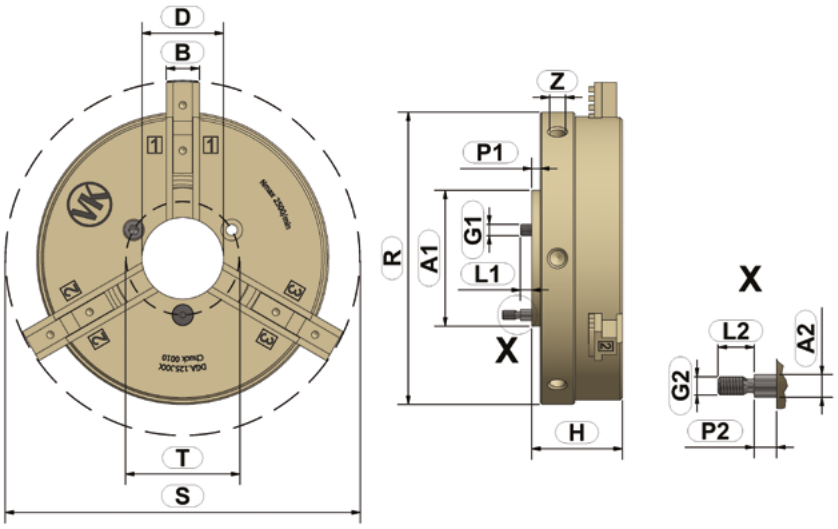

			Size			
		Variante	160	240	320	400
A [0/+0,01	Interface	1 [mm]	70	120	160	200
A2 [f9]		2 [mm]	6	-	-	-
B	Jaw width [mm]		14,7	24,7	29.7	34.7
D	Ø Center hole [mm]		46	68	90	113
G1	Mounting	1 [mm]	3 x M6	3 x M8	3 x M10	3 x M10
G2		2 [mm]	3 x M5	-	-	-
H	Height without Jaws [mm]		40,5	67,5	70	85
L1	Thread length	1 [mm]	9	10	15	16
L2		2 [mm]	9,5	-	-	-
P1	Interface length	1 [mm]	3,5	4	5	5
P2		2 [mm]	4	-	-	-
R	Outside-Ø [mm]		164	244	324	404
S	Max. circuit diameter [mm]		195	300	426	550
T	Mounting hole circle [mm]		59	86	116	145
Z	Clamping bore [mm]		10	10	10	10
	Concentricity [mm]		0,03	0,03	0.05	0.05
	Rotation speed n max. [1/min.]		2500	2000	1200	1000
	Travel path [mm im Ø]		80	120	160	220
	Weight [mm]		2,9	9	16	25
	Order number (with basic jaws)		**DGA.160.001**	**DGA.240.001**	**DGA.320.001**	**DGA.400.001**

VK Systems PLC
+41 44 970 20 00
info@vk-systems.ch
www.vk-systems.ch

DGA LINE

3-jaw chuck for fast clamping made on aluminum

Aluminium, Altefiert®

BASIC JAW SET 3 DGA

Technical data and order overview

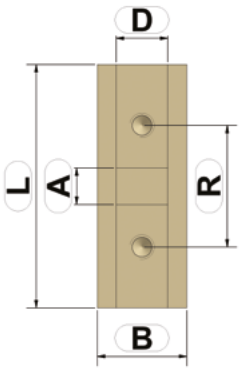

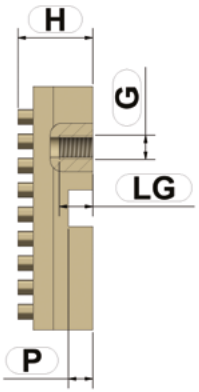

		Size			
		160	240	320	400
A [0/+0,01]	Interface [mm]	8	10	14	16
B	Jaw width [mm]	14,7	24,7	29,7	34,65
D	Ridge width	8,5	14,5	20	25
L	Total lenght [mm]	49	100	115	140
R	Space mounting holes [mm]	22,5	50	80	90
H	Maximum height [mm]	12,5	19	19,5	22
G	Thread	M4	M6	M8	M8
LG	Thread length [mm]	5,5	9	9	9
P	Interface length [mm]	4	4	4	4
	Order number (without Chuck)	**DGA.160.113**	**DGA.240.113**	**DGA.320.113**	**DGA.400.113**

DGA LINE

3-jaw chuck for fast clamping made on aluminum

Stainless steel and vacuum hardened / ground

JAW SET 3 DGA COMPLETE (INSIDE AND OUTSIDE CLAMPING)

Technical data and order overview

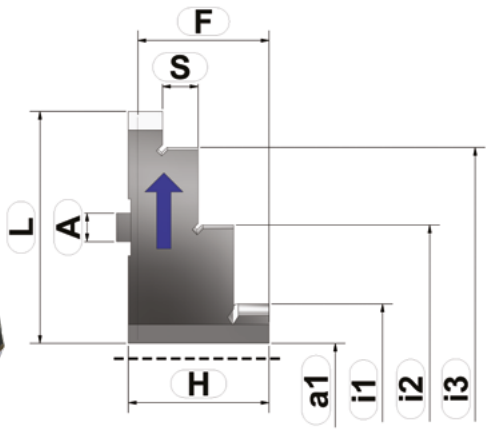

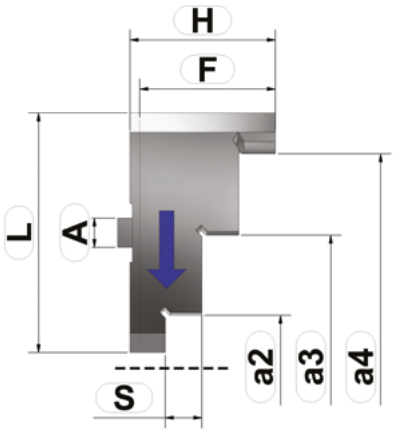

		Size			
		160	240	320	400
a1	Clamping range outside	1 - 81	1 - 121	4 - 160	5 - 220
a2		25 - 105	30 - 149	37 - 197	48 - 268
a3		57,5 - 137	100 - 238	112 - 272	143 - 363
a4		96 - 175	170 - 288	182 - 342	228 - 448
				248 - 408	308 - 528
i1	Clamping range inside	25 - 105	35 - 155	40 - 200	50 - 270
i2		62,5 - 142,5	105 - 225	105 - 265	130 - 350
i3		95 - 175	175 - 295	175 - 335	215 - 220
				250 - 410	310 - 530
F	Height from chuck body	28,5	41	50	65
H	Maximum height [mm]	35	50	55	72,5
L	Total lenght [mm]	58	100	140	175
S	Step height	7,5	10	10	12,5
	Jaw width	14,7	24,7	-	-
	Order number (without Chuck)	**DGA.160.114**	**DGA.240.114**	**DGA.320.114**	**DGA.400.114**

VK Systems PLC
+41 44 970 20 00
info@vk-systems.ch
www.vk-systems.ch